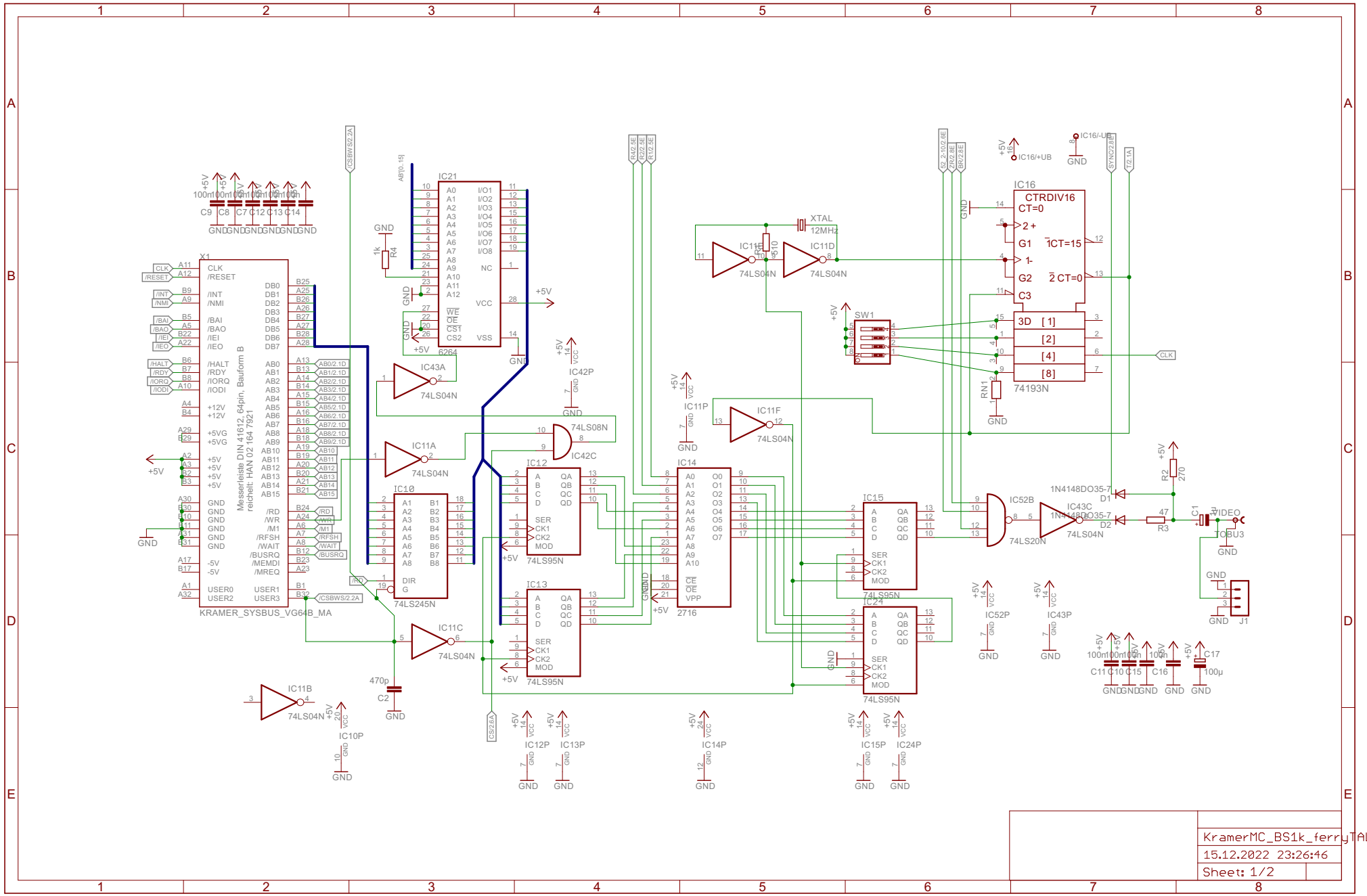
KRAMER_SYSBUS_VG64B_MA
Messerleiste DIN 41612, 64pin, Bauform B
reichelt: HAN 02 164 7921
IC21
6264
IC10
74LS245N
IC12
74LS95N
IC13
74LS95N
IC14
2716
IC15
74LS95N
IC24
74LS95N
IC16
CTRDIV16
74193N
XTAL
12MHz
SW1
IC42C
74LS08N
IC52B
74LS20N
IC43C
74LS04N
VIDEO
TOBU3
J1
KramerMC_BS1k_ferryTALE2022_v1.0
15.12.2022 23:26:46
Sheet: 1/2

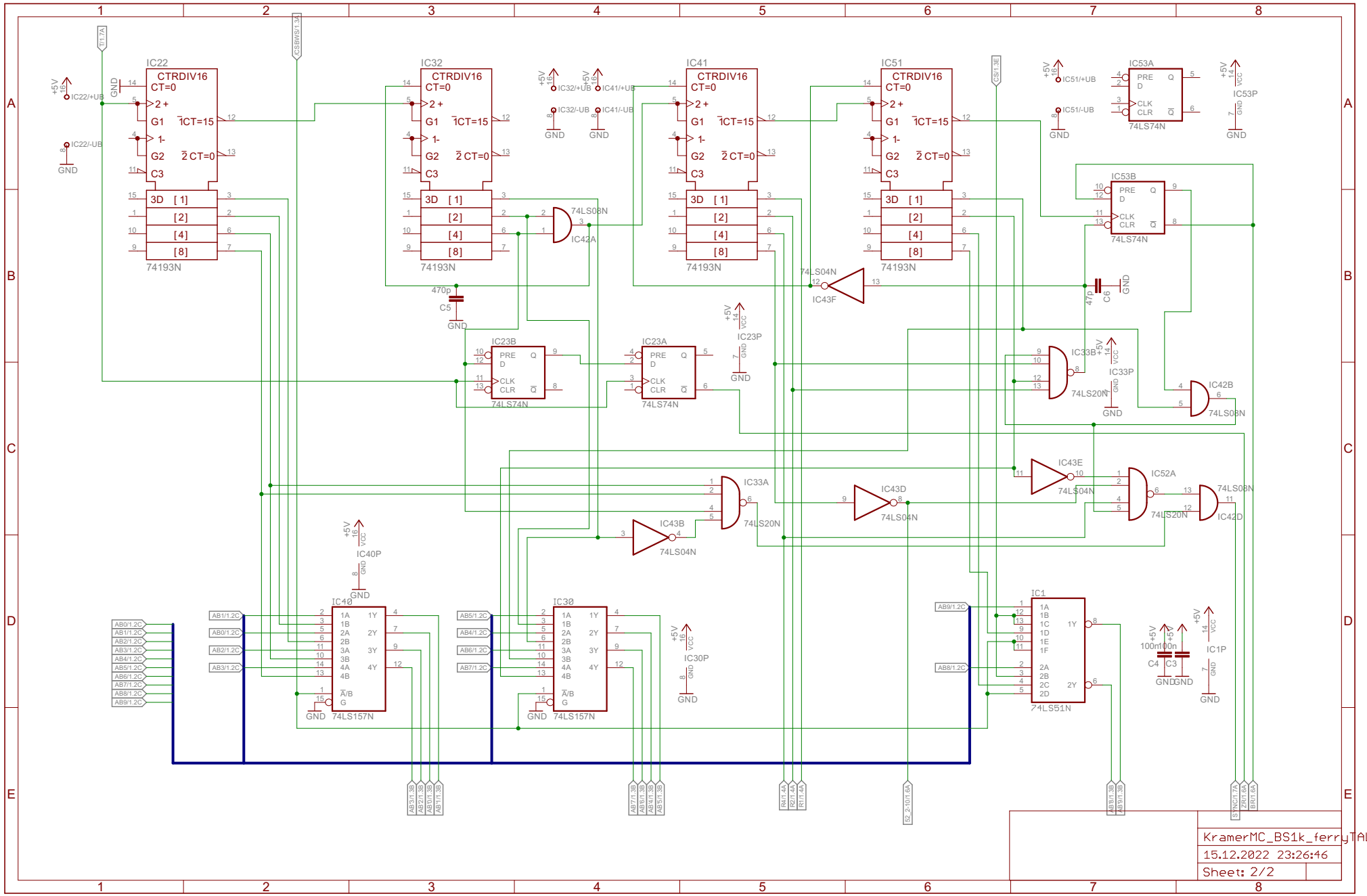
IC22
CTRDIV16
CT=0
74193N
IC32
CTRDIV16
CT=0
74193N
IC41
CTRDIV16
CT=0
74193N
IC51
CTRDIV16
CT=0
74193N
IC53A
74LS74N
IC53B
74LS74N
IC53P
IC23B
74LS74N
IC23A
74LS74N
IC23P
IC42A
74LS08N
IC42B
74LS08N
IC42D
74LS08N
IC43F
74LS04N
IC43E
74LS04N
IC43D
74LS04N
IC43B
74LS04N
IC33A
74LS20N
IC33B
74LS20N
IC33P
IC52A
74LS20N
IC40P
IC40
74LS157N
IC30
74LS157N
IC30P
IC1
74LS51N
IC1P
470p
C5
47p
C6
100n
C4
100n
C3
GND
+5V
VCC
AB0/1.2C
AB1/1.2C
AB2/1.2C
AB3/1.2C
AB4/1.2C
AB5/1.2C
AB6/1.2C
AB7/1.2C
AB8/1.2C
AB9/1.2C
KramerMC_BS1k_ferryTALE2022_v1.0
15.12.2022 23:26:46
Sheet: 2/2