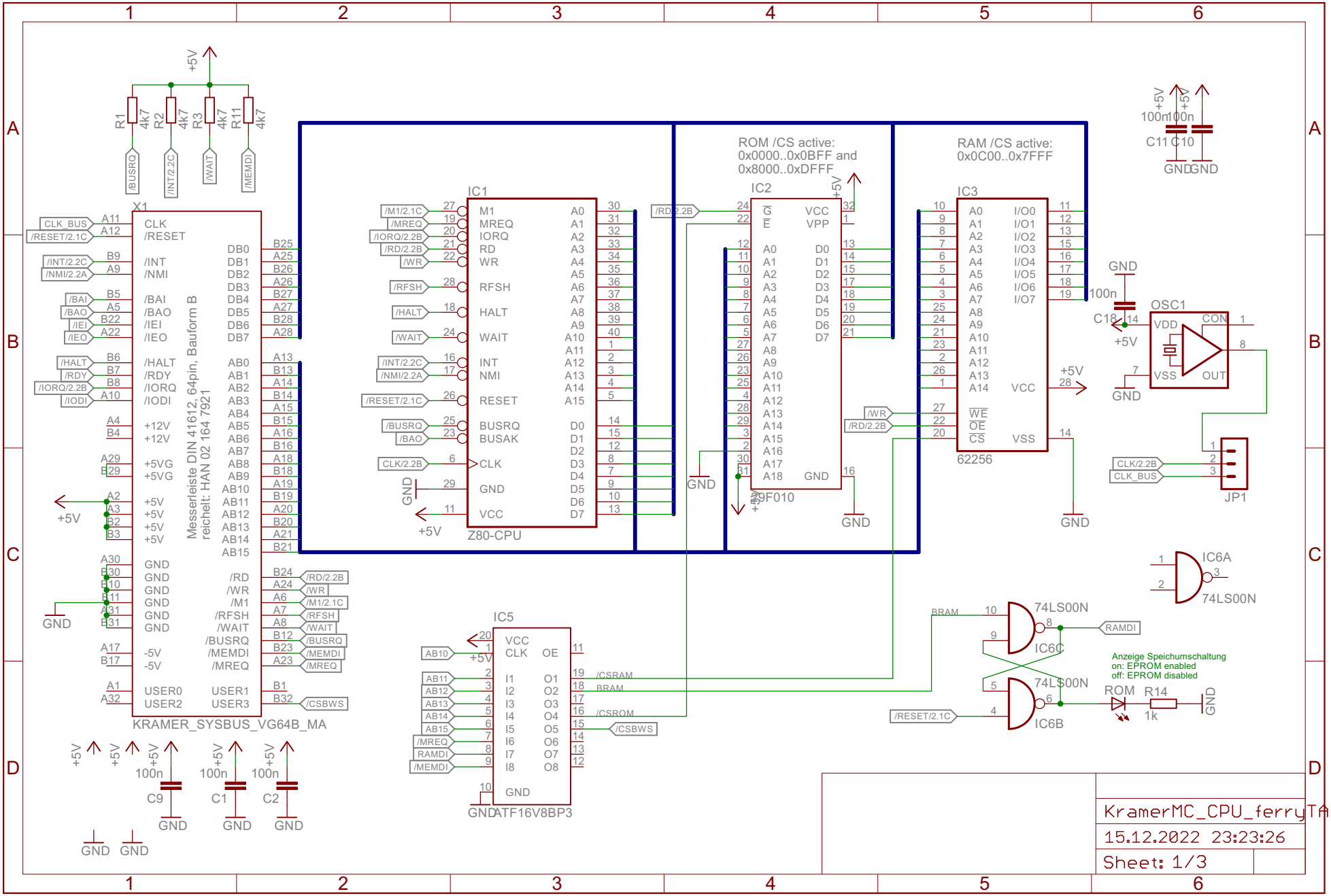
ROM /CS active:
0x0000..0x0BFF and
0x8000..0xDFFF
RAM /CS active:
0x0C00..0x7FFF
IC1
Z80-CPU
IC2
29F010
IC3
62256
X1
KRAMER_SYSBUS_VG64B_MA
Messerleiste DIN 41612, 64pin, Bauform B
reichelt: HAN 02 164 7921
IC5
ATF16V8BP3
IC6A
IC6B
IC6C
74LS00N
OSC1
JP1
Anzeige Speichumschaltung
on: EPROM enabled
off: EPROM disabled
KramerMC_CPU_ferryTALE2022_v1.0
15.12.2022 23:23:26
Sheet: 1/3

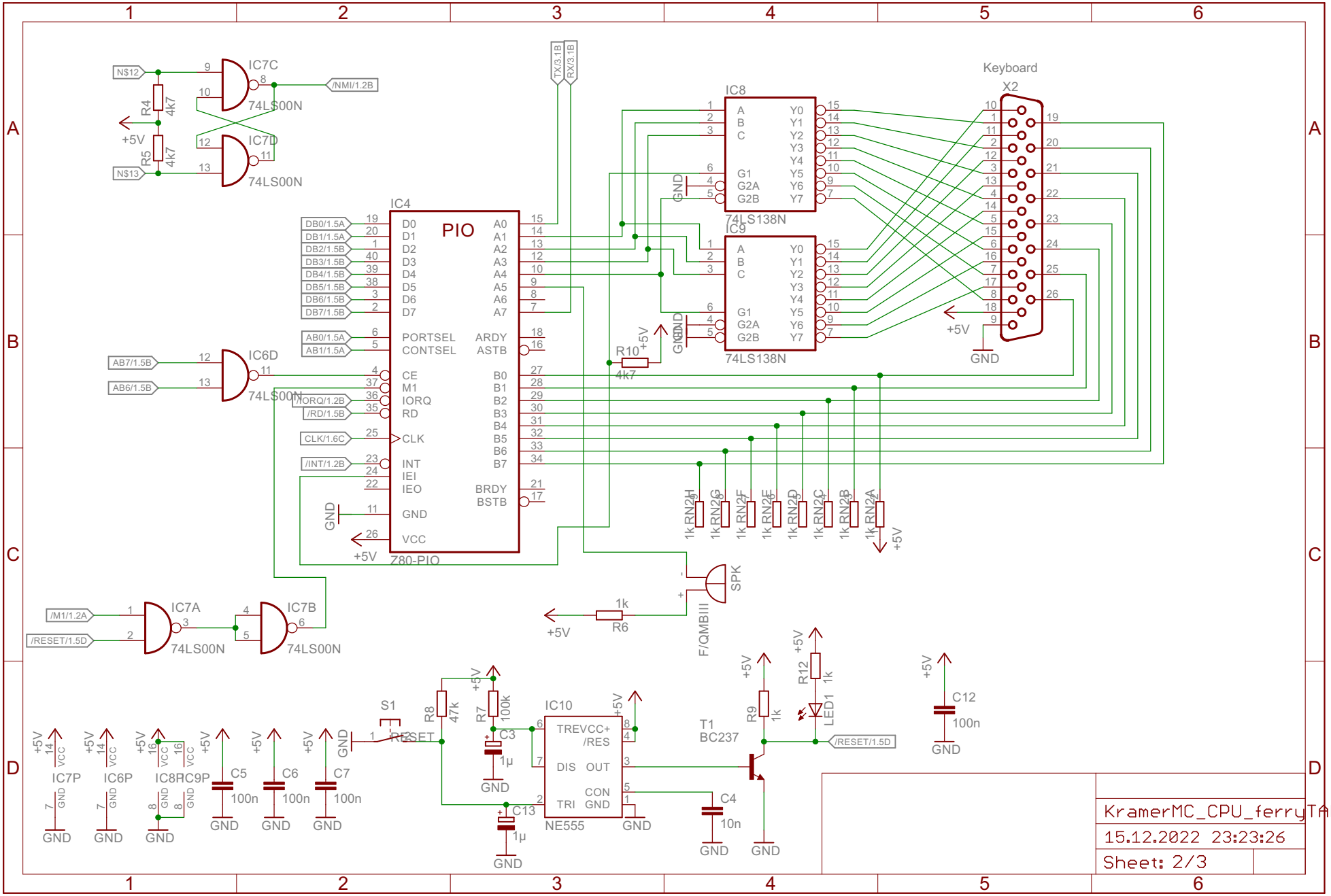
IC7C
74LS00N
IC7D
74LS00N
N$12
N$13
R4 4k7
R5 4k7
+5V
/NMI/1.2B
TX/3.1B
RX/3.1B
IC4
PIO
Z80-PIO
DB0/1.5A
DB1/1.5A
DB2/1.5B
DB3/1.5B
DB4/1.5B
DB5/1.5B
DB6/1.5B
DB7/1.5B
AB0/1.5A
AB1/1.5A
PORTSEL
CONTSEL
CE
M1
IORQ
RD
CLK
INT
IEI
IEO
GND
VCC
ARDY
ASTB
BRDY
BSTB
/IORQ/1.2B
/RD/1.5B
CLK/1.6C
/INT/1.2B
IC6D
74LS00N
AB7/1.5B
AB6/1.5B
IC8
74LS138N
IC9
74LS138N
Keyboard
X2
R10 4k7
1k RN2H
1k RN2G
1k RN2F
1k RN2E
1k RN2D
1k RN2C
1k RN2B
1k RN2A
SPK
F/QMBIII
R6 1k
IC7A
74LS00N
IC7B
74LS00N
/M1/1.2A
/RESET/1.5D
S1
RESET
R8 47k
R7 100k
C3 1µ
C13 1µ
IC10
NE555
TREVCC+
/RES
DIS
OUT
CON
TRI
GND
C4 10n
T1
BC237
R9 1k
R12 1k
LED1
/RESET/1.5D
C12 100n
IC7P
IC6P
IC8R
IC9P
C5 100n
C6 100n
C7 100n
KramerMC_CPU_ferryTALE2022_v1.0
15.12.2022 23:23:26
Sheet: 2/3

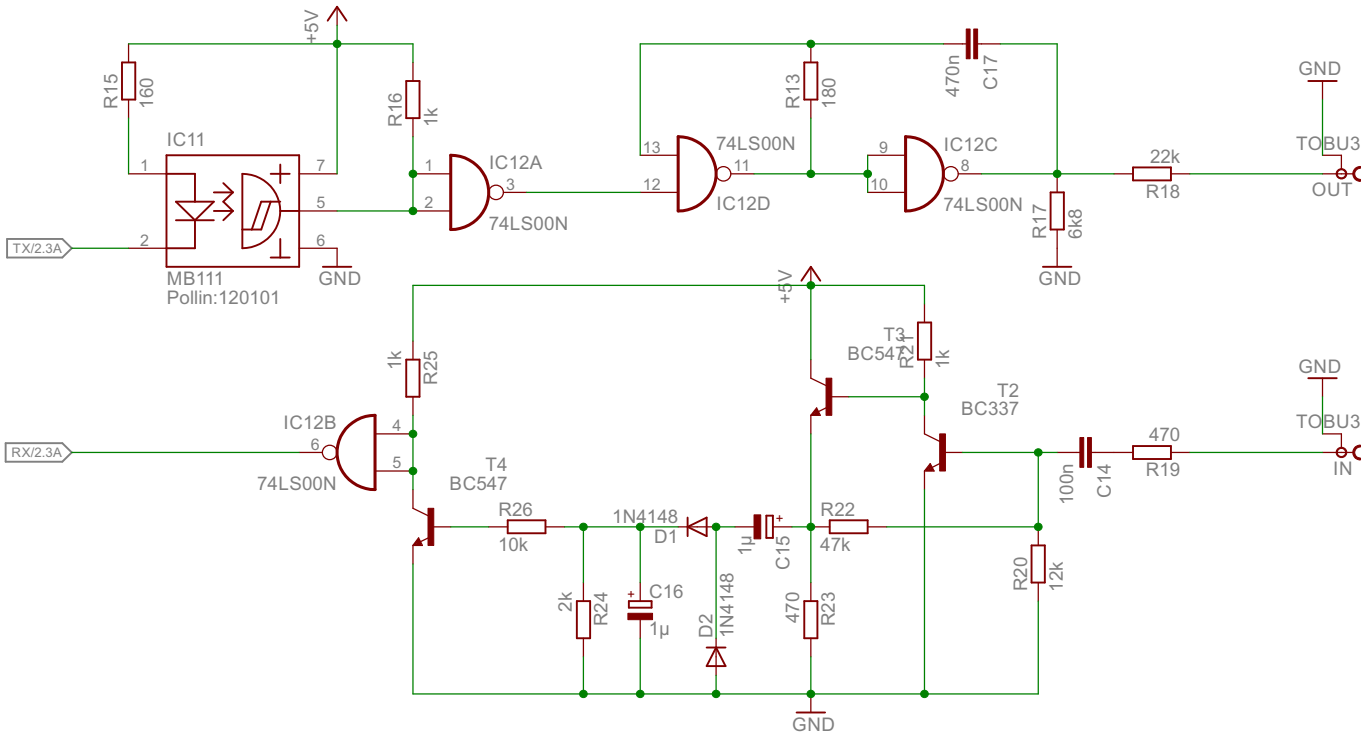

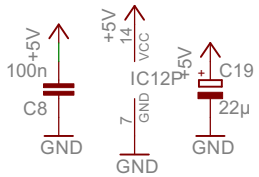

KramerMC_CPU_ferryTALE2022_v1.0

15.12.2022 23:23:26

Sheet: 3/3