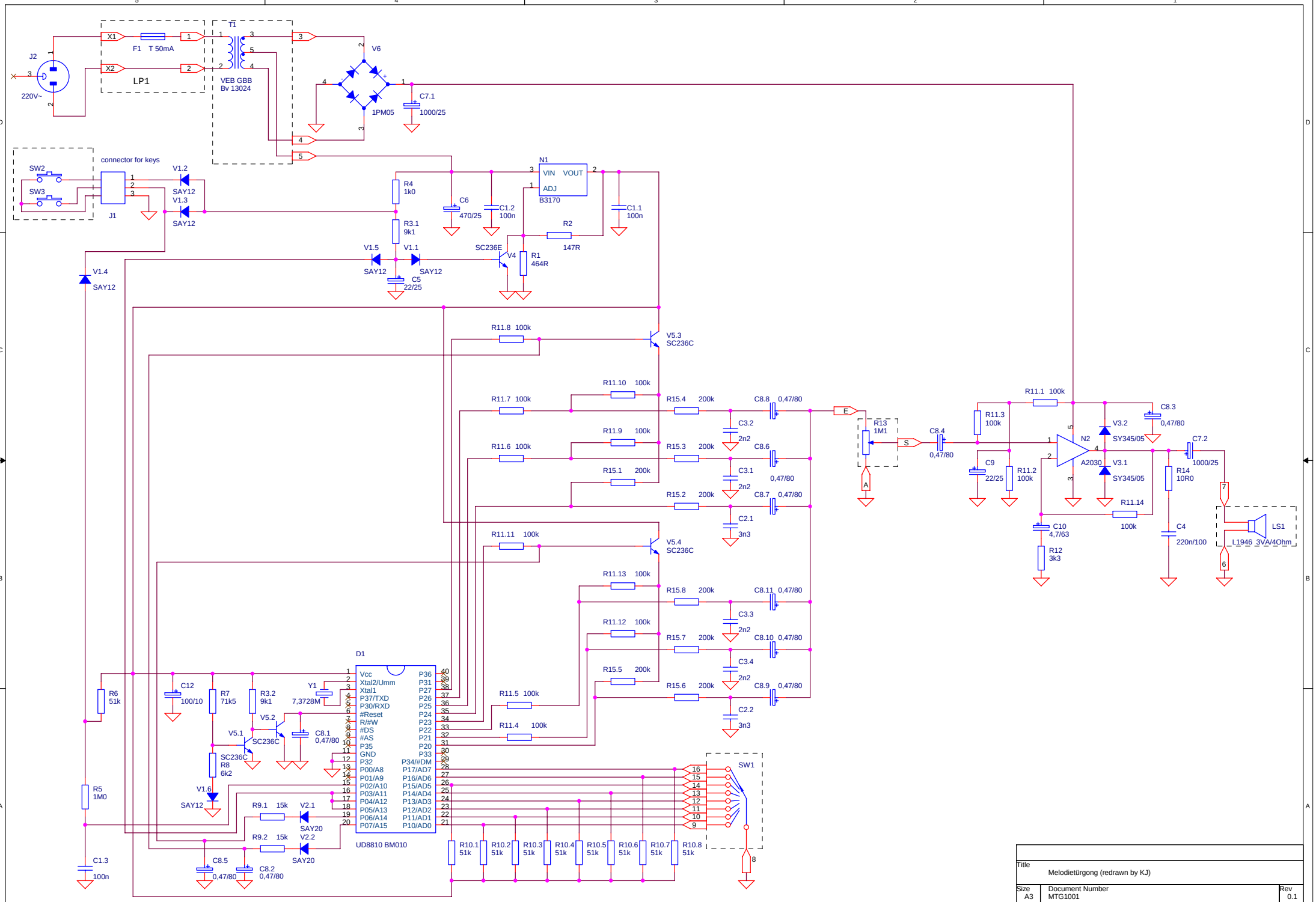

Title	Melodietürgong (redrawn by KJ)	
Size A3	Document Number MTG1001	Rev 0.1
Date: Thursday, October 29, 2009	Sheet 1 of 1	